Remote Power Solutions

A clean, affordable, renewable solution that gives you reliable, 24/7 power for all types of equipment in any environment. Many different voltage & output options available.

Weatherproof - Powder Coated - Aluminum Enclosure

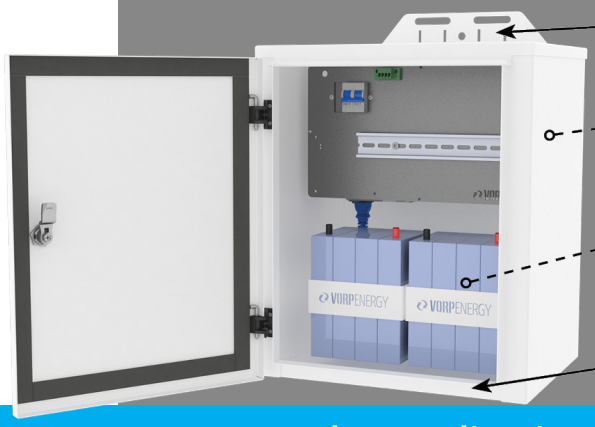

Remote Power Solutions

Popular Applications

- Surveillance with Antenna
- Surveillance with Cellular Gateway
- Wireless Bridges / Backhauls
- Remote Access Points
- IoT & M2M
- SCADA Networks
- LED Lighting

Pre-configured Power Assembly with OUR Pre-Installed Advanced MPPT Charge Algorithm based on Zone
(below example shows Vorp PoE injectors on DIN rail)

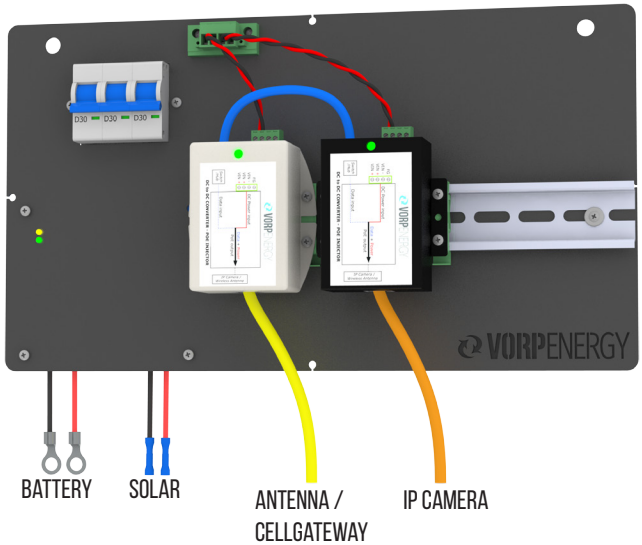

Vorp Remote Power Benefits

- Eliminates the need to trench for power
- Field Proven / Compact / Rugged
- Engineered to work with both Lithium Phosphate and Sealed Lead Acid (AGM / Gel) batteries (not included)
- Up to 5 days of backup time available
- Power Output Options Available: (18, 24, 48, 56V PoE), (12, 24, 48, 56 VDC), (24 VAC), (120 - 240VAC)
- Remote Power Kit Includes:
  Solar Panels with Mount, Enclosure with Mount & Pre-Configured Power Assembly

VORPENERGY

Vorp Energy

4774 South Hwy 191
Rexburg, ID 83440
Phone : + (208) 904-0424
E-Mail : support@vorpenergy.com

Simple *"Plug and Play"* Design. Just mount to a pole & plug your equipment into the available Powered Terminal Blocks.

Provides Continuous Power Day and Night!

Step 1	Determine the amount of power you will require to power your equipment. This is called the "Load". The Load is calculated by multiplying Volts x Amps. (Volts x Amps = Watts)
Step 2	See the map below to determine which Zone the equipment will be installed in. Different Zones receive different amounts of Peak Sun Hours.
Step 3	Refer to the color coded table below. Use your determined Zone and your Load in Watts to select the appropriate Part # in the right column.

Find your Zone and Load in Watts					Part #
Zone 1	**Zone 2**	**Zone 3**	**Zone 4**	**Zone 5**	
14 W	12.5 W	9.5 W	6.5 W	3.5 W	AL2-100W
27 W	25 W	19 W	13 W	7 W	AL2-200W
35 W	30 W	22 W	15 W	8 W	AL2-250W
45 W	35 W	27 W	18 W	10 W	AL2-300W
70 W	60 W	44 W	30 W	16 W	AL2-500W
90 W	70 W	54 W	36 W	20 W	AL2-600W
180 W	140 W	108 W	72 W	40 W	AL2-1200W
14 W	12.5 W	9.5 W	6.5 W	3.5 W	AL5-100W
27 W	25 W	19 W	13 W	7 W	AL5-200W
35 W	30 W	22 W	15 W	8 W	AL5-250W
45 W	35 W	27 W	18 W	10 W	AL5-300W
70 W	60 W	44 W	30 W	16 W	AL5-500W
90 W	70 W	54 W	36 W	20 W	AL5-600W
180 W	140 W	108 W	72 W	40 W	AL5-1200W

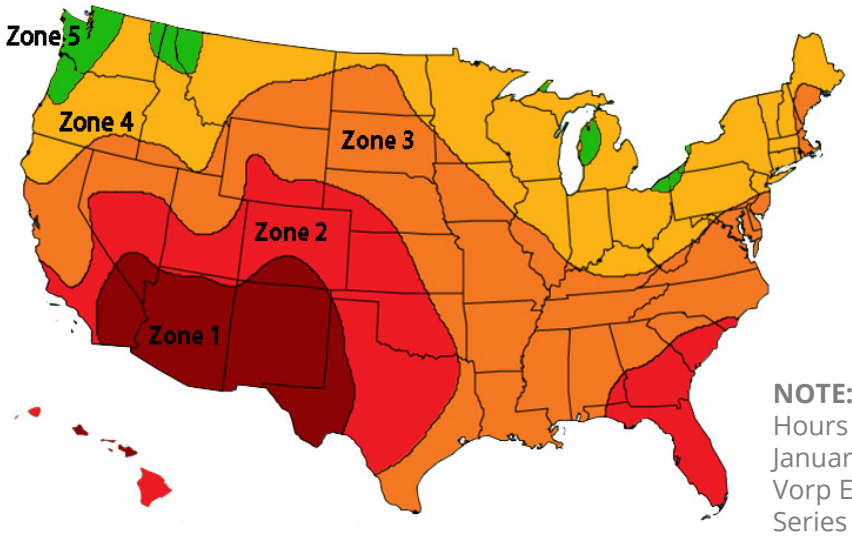

NOTE: This map shows the average Peak Sun Hours for the year. However, December and January consist of the shortest days of the year. Vorp Energy has designed the Remote Power Series to provide continuous power year round. To ensure uninterrupted power, these kits are sized as if it were December 21st every day of the year.

Kit Part #'s

Enclosure Part #	**AL2**			**AL5**		
Enclosure Size (Inside Dimensions)	**H**	**W**	**D**	**H**	**W**	**D**
	19"	16"	14"	30"	22"	13"
Enclosure Weight	13 LBS			33 LBS		
Material	Powder Coated Aluminum					
Lockable	Lockable with Padlock (Padlock not Included)					
Mounting System	Integrated Mounting System (Included)					
*** Lithium Battery Capacity**	240 Ah Equal to ~ 480 Ah of SLA			480 Ah Equal to ~ 960 Ah of SLA		
SLA Battery Capacity (12V Batteries)	200 Ah			500 Ah		

* Energy available in Lithium is about double that of Sealed Lead Acid do to the fact that you can use 80-90% of stored power in a Lithium battery but only 50% in a Sealed Lead Acid Battery.

Plug & Play Kit Part #	AL2/5-100W		AL2/5-200W		AL2/5-250W		AL2/5-300W		AL2/5-500W		AL2/5-600W		AL2/5-1200W	
Solar Array Size	100W		200W		250W		300W		500W		600W		1200W	
Individual Panel Dimensions	L	W	L	W	L	W	L	W	L	W	L	W	L	W
	40"	27"	40"	27"	65"	39"	65"	39"	65"	39"	65"	39"	65"	39"
Number of Panels	(1) 100W		(2) 100W		(1) 250W		(1) 300W		(2) 250W		(2) 300W		(4) 300W	
Solar Array Dimensions	40" x 27"		40" x 54"		65" x 39"		65" x 39"		(2) 65" x 39"		(2) 65" x 39"		130" x 78"	
Solar Panel Connection	NA		Series		NA		Series		Series		Series		2 in Series & 2 in Parallel	
12V Battery Connection	Parallel		Parallel		Parallel		Parallel		Series or Parallel		Series or Parallel		Series	
Voltage Output	12 VDC		12 VDC		12 VDC		12 VDC		12 or 24 VDC		12 or 24 VDC		24 VDC	
Note:														
Solar Mount	VE-SPM27		VE-SPM55X						(2) VE-SPM55X				VE-TPM4	
Recommended Pole Size	2" – 6" Schedule 40 Ridged Metal												8" (Pole InDesign)	
Solar Charge Controller	Advanced Max Power Point Tracking (MPPT) with Preinstalled Advanced Charge Algorithm based on Zone													
Required Battery Type	Lithium Iron Phosphate or Sealed Lead Acid (Absorbent Glass Matt (AGM) or Gel)													
Operating Temperature	-40° C to +60° C (-40° F to +140° F) (SLA Batteries can lose up to 50% of stored energy in temperatures below 32° F)													

Side of Pole Mount For Solar Panel used in 100W Kit - (Pole NOT Included)

Pole Mount Part #	Wind Rating
VE-SPM27	90 MPH

Single Arm Adjustable Angle Mount

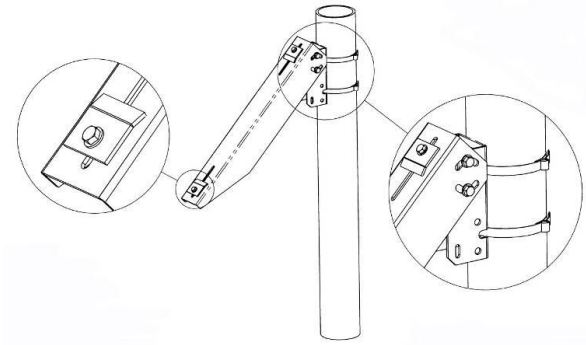

Mount for (1) 100 Watt Solar Panel

Side of Pole Mount For Solar Panel/s used in 200W - 600W Kits - (Pole NOT Included)

Pole Mount Part #	Wind Rating
VE-SPM55X	115 MPH

4 Arm Adjustable Angle Mount

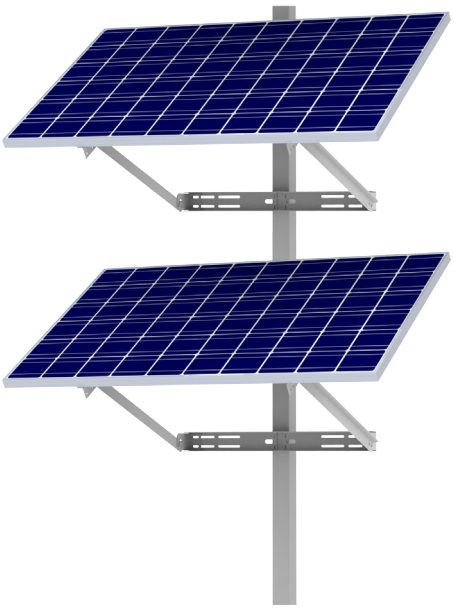

Mount with (2) 250 or (2) 300 Watt Solar Panels

Top of Pole Mount used in 1200W Kit - (Pole is Included with mount)

Pole Mount Part #	Wind Rating
VE-TPM4	100 MPH

Top of Pole Adjustable Angle Mount

Mount for (4) 300 Watt Solar Panels

Movable Solar Solutions

900 Watt Solar Skid

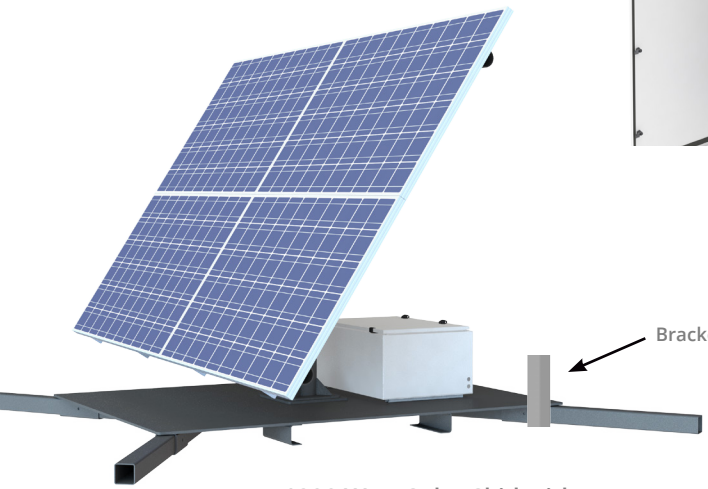

1200 Watt Solar Skid with Adjustable Panel Tilt

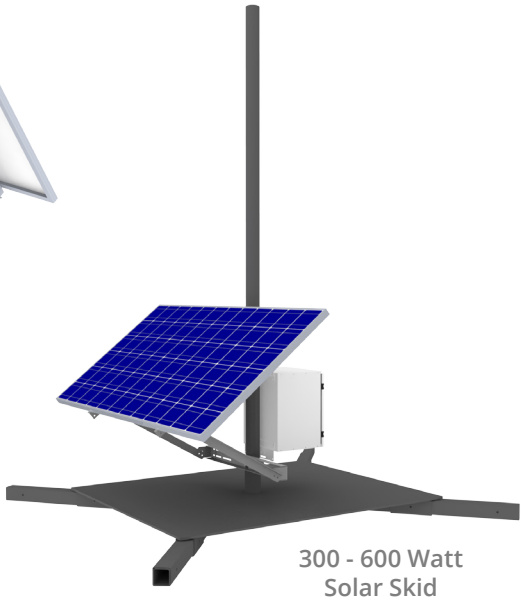

300 - 600 Watt Solar Skid