VORPENERGY

INSTALL GUIDE

SPM-27 SOLAR MOUNT

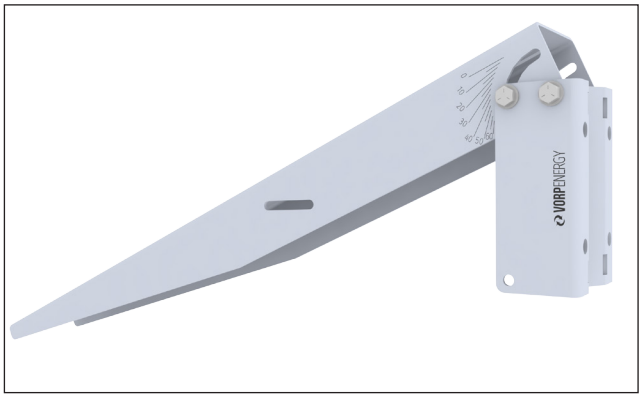

COMPONENT LIST

SPM-C-27 (1X)

Hardware kit includes:

(8) 5⁄16”-18 x 1-1⁄4”
(16) 5⁄16” Flat washers
(8) 5⁄16” Lock washers
(8) 5⁄16”-18 Hex nuts

HOSE CLAMP (2X)

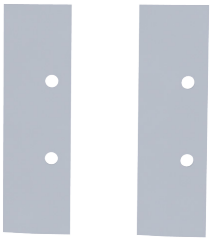

SPM-CLP (2X)

SPM-C-6 (1X)

STEP 1

Attach the SPM-C-27 to the SPM-C-6 & set the adjustment angle.

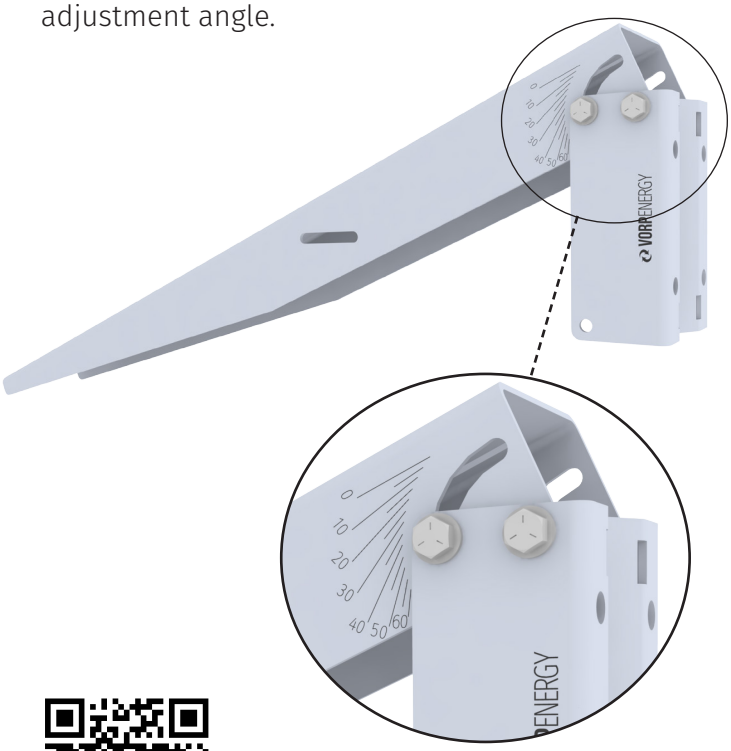

Scan the QR Code for the Angle calculator or go to:
http://www.vorpenergy.com/resources/calculators/

STEP 2

Attach the SPM-CLP (2x) to the SPM-C-27. Do not tighten nut completely. SPM-CLP should move freely in the slots.

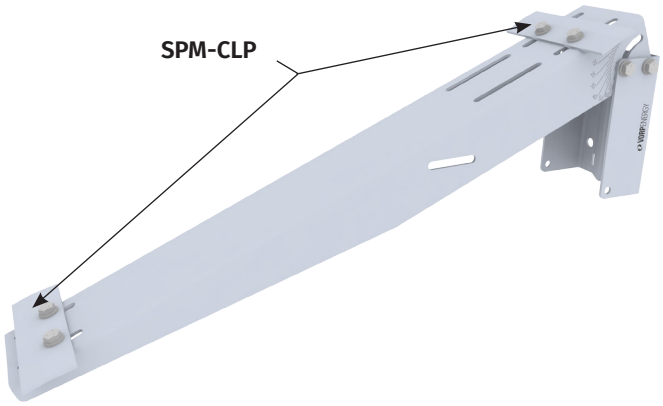

STEP 3

Attach the completed assembly to the solar panel using the SPM-CLP to clamp the solar panel to mounting bracket.

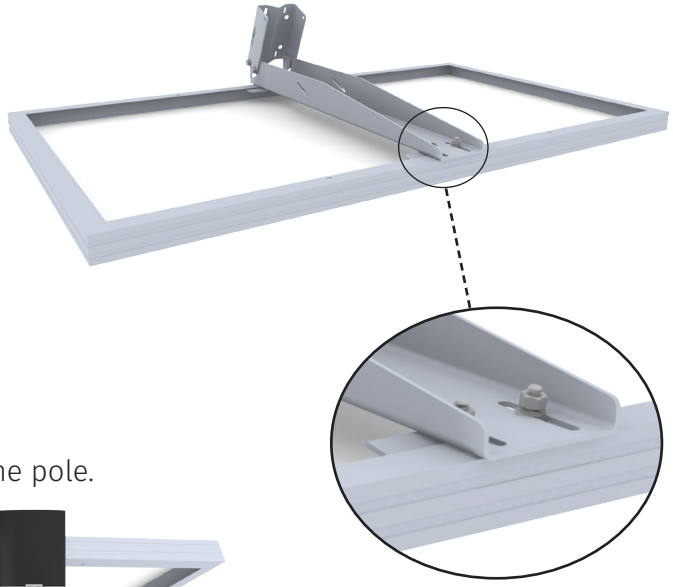

STEP 4

Use the included hose clamps to attach to the pole.

VORPENERGY
4774 South Hwy 191
Rexburg, ID 83440
Phone : + (208) 904-0424
E-Mail : support@vorpenergy.com